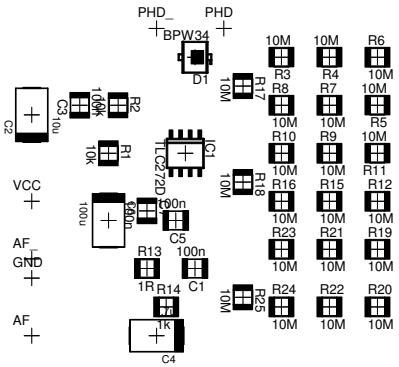

26.10.2006 16:58:01 C:\Program Files\eagle\projects\opto_obor\opto_obor_smd_v2.brd