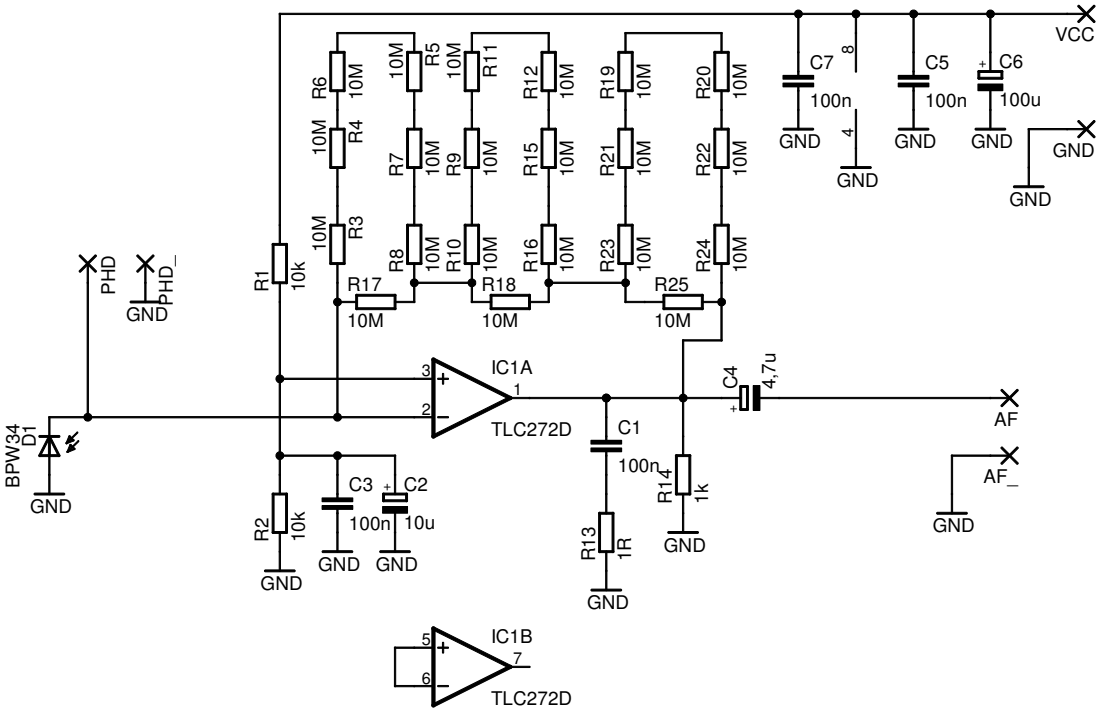
VCC
C7
100n
C5
100n
C6
100u
GND
PHD
PHD_
R1
10k
R2
10k
R3
10M
R4
10M
R5
10M
R6
10M
R7
10M
R8
10M
R9
10M
R10
10M
R11
10M
R12
10M
R15
10M
R16
10M
R17
10M
R18
10M
R19
10M
R20
10M
R21
10M
R22
10M
R23
10M
R24
10M
R25
10M
IC1A
TLC272D
IC1B
TLC272D
C1
100n
C2
10u
C3
100n
C4
4,7u
R13
1R
R14
1k
BPW34
D1
AF
AF_